Balun Panel, 75/120W, 2-8Mbit/s, E1 & E2, Shielded, 19” 1RU 96xSMB (m) to 48xRJ45 (f)

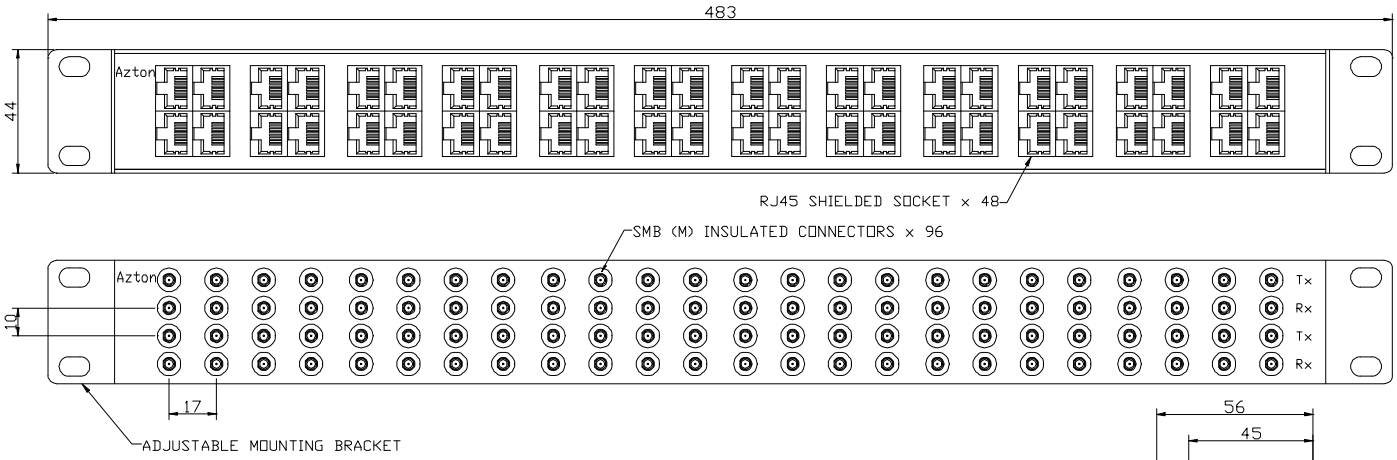

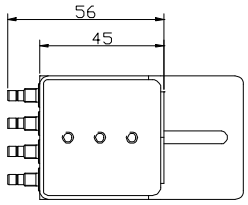

VIEW WITH BRACKET REMOVED

PRODUCT DESCRIPTION

This Balun Panel converts E1 and E2 G.703 signals from unbalanced 75Ω coaxial to balanced 120Ω twisted pair transmissions. A bi-directional device requiring no external power, it allows the user to connect telecommunications equipment with mismatched interfaces or facilitates the conversion from coaxial to twisted pair distribution wiring. This product offers the following features:-

- coax to twisted pair conversion
- 75Ω to 120Ω impedances
- > 70dB cross talk
- mounts in standard 19” rack
- zinc sealed, powder coated steel
- SMB (m) to RJ45 shielded
- > 33dB return loss 0.3 to 3MHz
- mount coax or RJ45 to front
- > 1.25µm of gold plating on pin
- configuration options available
- exceeds G.703 requirements
- < 0.15dB E1 insertion loss
- mount recessed to ease cable entry
- teflon coaxial insulators
- long life, high reliability

OPERATING CONDITIONS

Matching Impedance:	75 ohm unbalanced coaxial to 120 ohm balanced twisted pair
Bit Rate:	2Mbit/s (E1) and 8Mbit/s (E2) per ITU-T G.703 Line Code
Signal Level:	2.37V nominal peak voltage at the coaxial end per G.703
Working Temperature:	-30°C to 75°C

ELECTRICAL SPECIFICATIONS

Insertion Loss:	< 0.15dB from 51kHz to 3.072MHz (2Mbit/s, E1) and < 0.20dB from 211kHz to 12.673MHz (8Mbit/s, E2) in both directions
Return Loss:	Exceeds G.703 by > 13dB for 2Mbit/s and > 8dB for 8Mbit/s
Pulse Shape:	Exceeds G.703 requirements for 2Mbit/s and 8Mbit/s
Cross Talk:	> 70dB from 51kHz to 12.673MHz between channels
Isolation Voltage:	< 250V DC

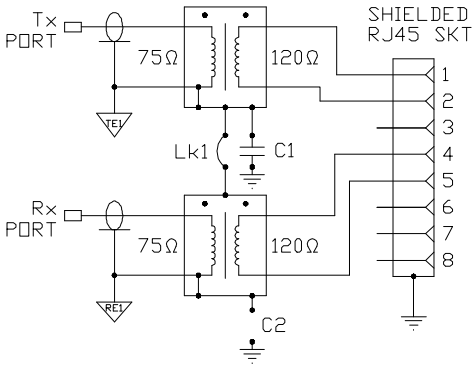

MECHANICAL SPECIFICATIONS

Coaxial Connector:	SMB male to IEC 169-10 Outer Contact: Brass, Plated Cu/Ni5/Au0.8 Pin: Brass, Plated Cu/Ni5/Au1.25 Insulator: Teflon Mating Cycles: 500min
RJ45 Connector:	Contacts: Phosphor Bronze, Plated Ni/Au Moulding: PBT Glass Filled, Black Shield: Brass, Plated Sn
Panel:	Steel, Zinc Sealed and Powder Coated Black
Insulators:	Polyethylene, Black

ACCESSORIES

Mounting Brackets:	For 21” and 23” racks

© Azton Technologies 2003